THIS IS ISSUED IN STRICT CONFIDENCE THAT IT IS NOT USED AS A BASIS FOR MANUFACTURE OR SALE AND THAT IT IS NOT COPIED, REPRINTED OR DISCLOSED TO A THIRD PARTY EITHER WHOLLY OR IN PART WITHOUT THE PRIOR WRITTEN CONSENT OF CAL TEST ELECTRONICS, INC.

REVISIONS			
REV.	DESCRIPTION	DATE	APPROVED
A	INITIAL RELEASE	1/25/2022	B. HANSEN

NOTES:

1. MATERIAL:
   INSULATOR: PA 66 (NYLON)
   JACK: BRASS, Ni PLATED
   ROUND PANEL NUT: BRASS, Ni PLATED.

2. RATING:
   VOLTAGE: 600 V CAT II (IEC 61010)
   CURRENT: 10 A MAX
   RESISTANCE: <5 mΩ
   TEMPERATURE: -20°C TO 80°C.

3. INSULATOR THREAD: M8 X 0.75.

4. MAXIMUM PANEL THICKNESS: 8.5 mm (.33").

5. RECOMMENDED ASSEMBLY TOOL: CT3076.

6. ROUND PANEL NUT REPLACEMENT: CT3081.

7. RoHS 2 COMPLIANT.

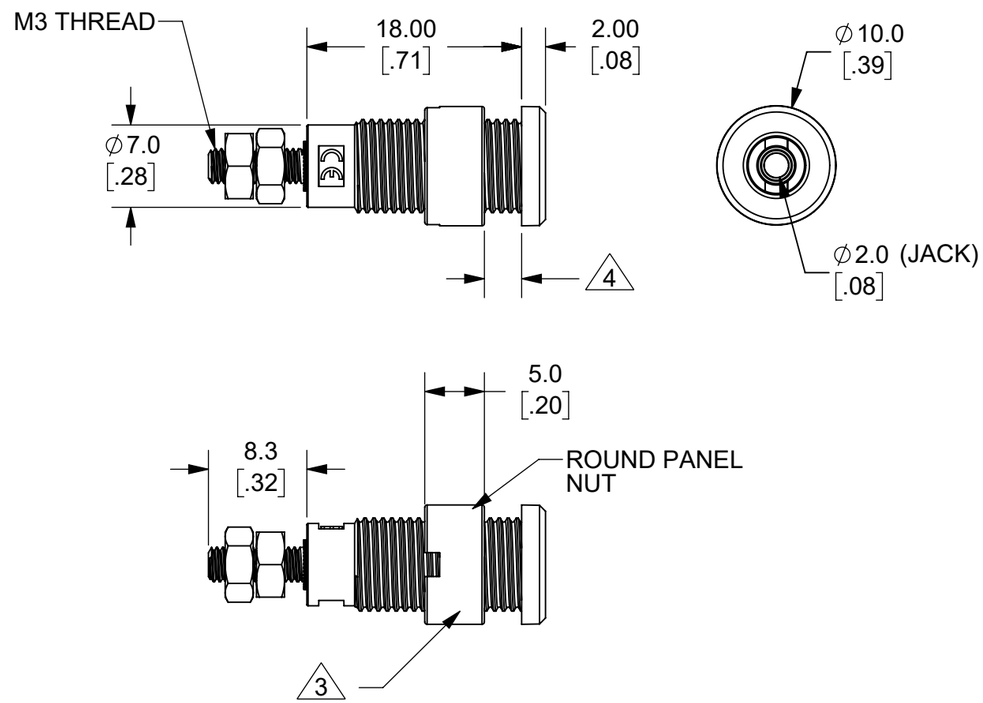

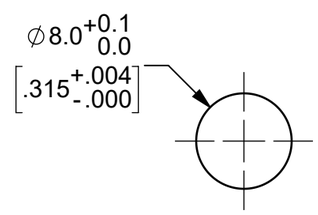

PANEL MOUNT HOLE

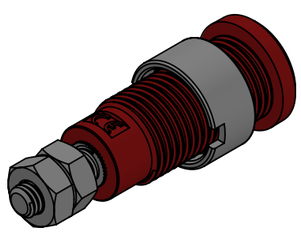

ISOMETRIC VIEW

PART NUMBER	CONFIGURATION	NOTES / REFERENCE
CT3075-9	WHITE	SPECIAL ORDER
CT3075-8	GREY	SPECIAL ORDER
CT3075-7	PURPLE	SPECIAL ORDER
CT3075-6	BLUE	SPECIAL ORDER
CT3075-5	GREEN	SPECIAL ORDER
CT3075-4	YELLOW	SPECIAL ORDER
CT3075-3	ORANGE	SPECIAL ORDER
CT3075-2	RED	STANDARD
CT3075-1	BROWN	SPECIAL ORDER
CT3075-0	BLACK	STANDARD

PART NUMBER TABLE

THIRD ANGLE PROJECTION

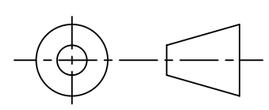

REFERENCE

UNLESS OTHERWISE SPECIFIED DIMENSIONS ARE IN MILLIMETERS
TOLERANCES ARE:
X.X = ±0.5 X.X° = ±0.5°
X.XX = ±0.25
X.XXX = ±0.125
DO NOT SCALE DRAWING

MATERIAL: SEE NOTES

TREATMENT: N/A

FINISH: SEE NOTES

PROJECT NO.

APPROVALS		DATE
DRAWN	G.S.G.	1/25/2022
CHECKER	B. HANSEN	1/25/2022
ENGR.	B. HANSEN	1/25/2022
DESIGN ACTIVITY		

METRIC

Cal Test ELECTRONICS
22820 Savi Ranch Prky.
Yorba Linda, CA 92887
USA

TITLE: 2mm SHEATHED JACK, PANEL MOUNT w/M3 STUD

SIZE: B | CAGE CODE: 43F45 | DWG. NO.: CT3075 | REV.: A

SCALE: 2:1 | SHEET: 1 OF 1