THIS IS ISSUED IN STRICT CONFIDENCE THAT IT IS NOT USED AS A BASIS FOR MANUFACTURE OR SALE AND THAT IT IS NOT COPIED, REPRINTED OR DISCLOSED TO A THIRD PARTY EITHER WHOLLY OR IN PART WITHOUT THE PRIOR WRITTEN CONSENT OF CAL TEST ELECTRONICS, INC.

REVISIONS			
REV.	DESCRIPTION	DATE	APPROVED
A	INITIAL RELEASE	8/24/2022	B. Hansen

NOTES:

1. MATERIAL:
   INSULATOR: PA 66 (NYLON)
   JACK: BRASS, Ni PLATED.

2. RATING:
   VOLTAGE: 1000 V CAT IV (IEC 61010)
   CURRENT: 36 A MAX.
   TEMPERATURE: -20°C TO 80°C.

3. RoHS 2 COMPLIANT.

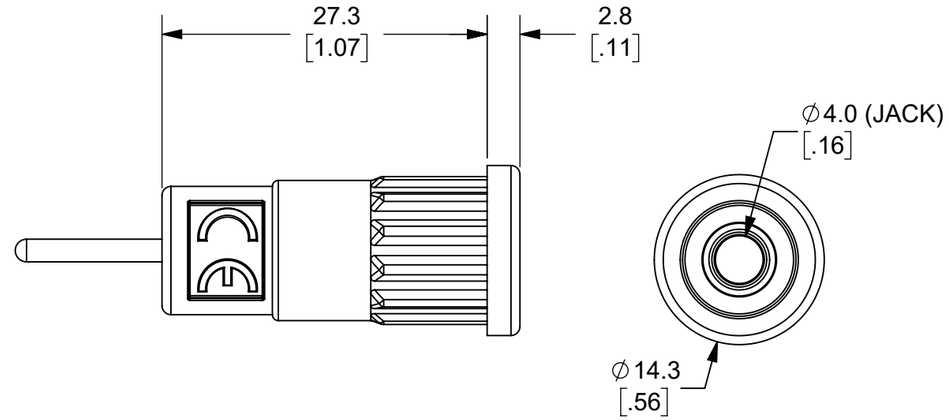

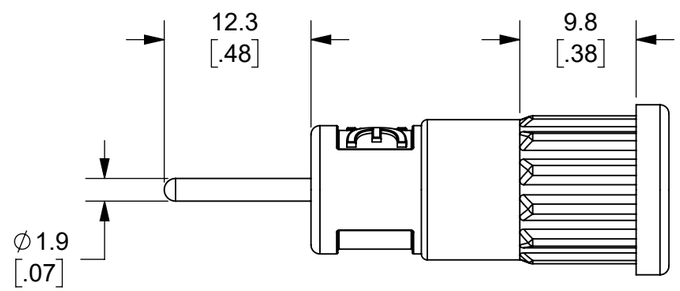

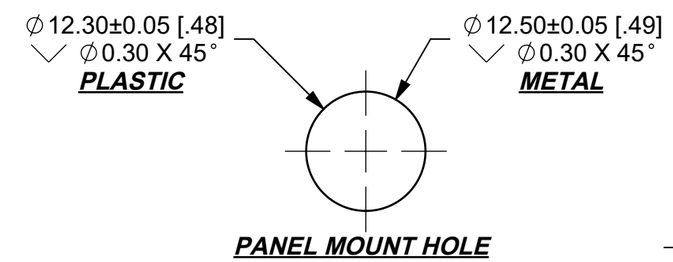

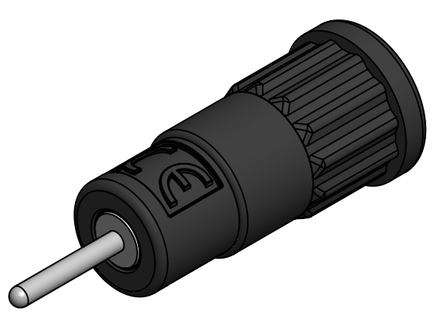

ISOMETRIC VIEW

PART NUMBER	CONFIGURATION	NOTES / REFERENCE
CT3887-9	WHITE	-
CT3887-6	BLUE	-
CT3887-5	GREEN	-
CT3887-4	YELLOW	-
CT3887-2	RED	-
CT3887-0	BLACK	-

PART NUMBER TABLE

THIRD ANGLE PROJECTION

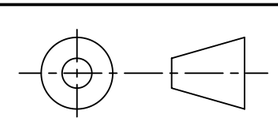

REFERENCE

UNLESS OTHERWISE SPECIFIED DIMENSIONS ARE IN MILLIMETERS
TOLERANCES ARE:
X.X = ±0.5 X.X° = ±0.5°
X.XX = ±0.25
X.XXX = ±0.125
DO NOT SCALE DRAWING

MATERIAL: SEE NOTES

TREATMENT: N/A

FINISH: SEE NOTES

PROJECT NO.

APPROVALS		DATE
DRAWN	G.S.G.	8/22/2022
CHECKER	B. HANSEN	8/22/2022
ENGR.	B. HANSEN	8/22/2022
DESIGN ACTIVITY		

METRIC

Cal Test ELECTRONICS
22820 Savi Ranch Prky.
Yorba Linda, CA 92887
USA

TITLE: 4mm SHEATHED JACK, PANEL MOUNT PRESS FIT w/2mm PIN

SIZE	CAGE CODE	DWG. NO.	REV.
B	43F45	CT3887	A

SCALE 2:1 SHEET 1 OF 1