THIS IS ISSUED IN STRICT CONFIDENCE THAT IT IS NOT USED AS A BASIS FOR MANUFACTURE OR SALE AND THAT IT IS NOT COPIED, REPRINTED OR DISCLOSED TO A THIRD PARTY EITHER WHOLLY OR IN PART WITHOUT THE PRIOR WRITTEN CONSENT OF CAL TEST ELECTRONICS, INC.

REVISIONS			
REV.	DESCRIPTION	DATE	APPROVED
A	INITIAL RELEASE	9/6/2023	B. Hansen
B	CONFIGURATION UPDATE; DIM 32.5 [1.28] WAS 31 [1.22], ∅10.0 [.39] WAS ∅6.5 [.26]; DELETED DIM. 15 [.59]; NOTE 5, BRASS, NICKEL PLT. WAS STAINLESS STEEL, PASSIVATED, NOTE 6, FREQUENCY WAS 18 GHZ, NOTE 8 WAS S. KOREA.	2/19/2025	B. Hansen

NOTES:

1. ALL SPECIFICATIONS SUBJECT TO CHANGE WITHOUT NOTICE.
2. ADAPTER TO MEET OR EXCEED ALL SPECIFICATIONS PER MIL-39012.
3. MATING DIMENSIONS IN ACCORDANCE WITH MIL-STD-348.
4. VSWR AND FREQUENCY RANGE SPECIFICATIONS ARE FOR REFERENCE AND ARE DEPENDANT ON CABLE TYPE AND OTHER APPLICATION SPECIFIC CONDITIONS.
5. MATERIAL:
   - BODY AND COUPLING NUT: BRASS, NICKEL PLT.
   - CENTER CONTACT: BeCu, GOLD PLATED
   - DIELECTRIC: PTFE
   - GASKET: SILICONE RUBBER
6. ELECTRICAL:
   - IMPEDANCE: 50 Ω
   - FREQUENCY: DC - 12 GHz
   - CONTACT CURRENT: DC 2.0 A MAX
   - WORKING VOLTAGE: 480 Vrms
   - INSERTION LOSS: ≤0.03 x √f(GHz) dB
   - POWER HANDLING: ≤200 W @ 2 GHz (@ 20°C, SEA LEVEL, VSWR 1.0)
   - VSWR:1.20:1 @ DC - 12 GHz
   - RF LEAKAGE: ≥100 dB TO 1 GHz
7. MECHANICAL:
   - RECOMMENDED TORQUE: 0.7 Nm TO 1.1 Nm
   - TEMPERATURE RANGE: -55°C TO +125°C
8. COUNTRY OF ORIGIN: TAIWAN
9. RoHS AND REACH COMPLIANT.

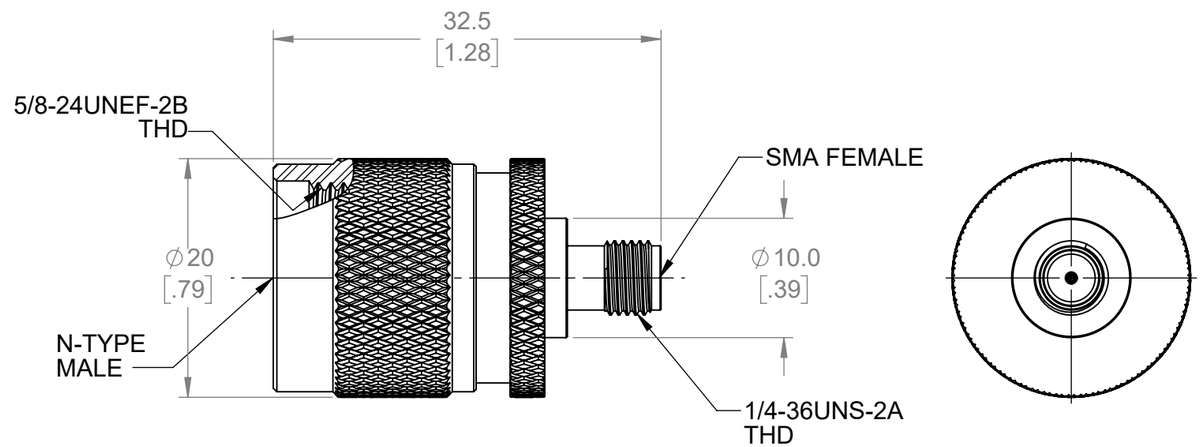

ISOMETRIC VIEW
SCALE 1:1

CT3320A	BETWEEN-SERIES	IN-LINE
MODEL NUMBER	CONFIGURATION	NOTES / REFERENCE

MODEL NUMBER TABLE

THIRD ANGLE PROJECTION

REFERENCE

UNLESS OTHERWISE SPECIFIED DIMENSIONS ARE IN MILLIMETERS
TOLERANCES ARE:
X.X = ±0.5 X.X° = ±0.5°
X.XX = ±0.25
X.XXX = ±0.125
DO NOT SCALE DRAWING

MATERIAL: SEE NOTES
TREATMENT: NONE
FINISH: SEE NOTES

PROJECT NO. A844 / A598

APPROVALS		DATE
DRAWN	WDH	7/7/2021
CHECKER		
ENGR.	B. HANSEN	7/7/2021
DESIGN ACTIVITY		

METRIC

Cal Test ELECTRONICS
22820 Savi Ranch Prky.
Yorba Linda, CA 92887
USA

TITLE: ADAPTER, N-TYPE MALE TO SMA FEMALE, 50 Ω, INSTRUMENT GRADE

SIZE	CAGE CODE	DWG. NO.	REV.
B	43F45	CT3320A	B

SCALE 2:1 SHEET 1 OF 1