THIS IS ISSUED IN STRICT CONFIDENCE THAT IT IS NOT USED AS A BASIS FOR MANUFACTURE OR SALE AND THAT IT IS NOT COPIED, REPRINTED OR DISCLOSED TO A THIRD PARTY EITHER WHOLLY OR IN PART WITHOUT THE PRIOR WRITTEN CONSENT OF CAL TEST ELECTRONICS, INC.

REVISIONS			
REV.	DESCRIPTION	DATE	APPROVED

NOTES:

1. MATERIAL:
   INSULATOR: POLYAMIDE (NYLON)
   JACK: BRASS, Ni PLATED
   SET SCREW: BRASS.
2. RATING:
   VOLTAGE: 1,200 VAC / VDC MAX
   CURRENT: 36 A MAX
   TEMPERATURE: -20°C TO +80°C.
3. MAXIMUM WIRE SIZE:
   CONDUCTOR: ∅2.3 mm (12 AWG)
   STRIP LENGTH: 6.4 mm (.25)
4. RoHS 2 COMPLIANT

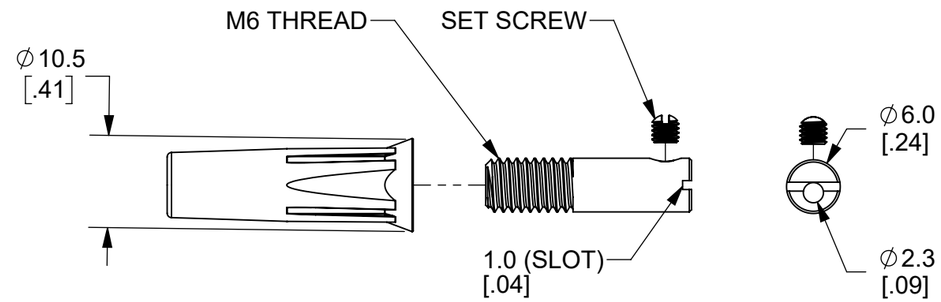

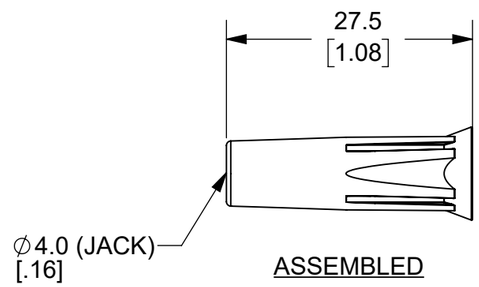

ASSEMBLED

ASSEMBLY INSTRUCTIONS:

1. STRIP WIRE 6.4 mm (.25").
2. INSERT STRIPPED END OF WIRE INTO THE JACK BODY. AND TIGHTEN DOWN SET SCREW. (SET SCREW REQUIRES SMALL FLAT BLADE SCREWDRIVER).
3. PRESS JACK WITH WIRE INTO THE BACK OF INSULATOR HOUSING AND ENGAGE THREADS.
4. USING THE SAME SMALL SCREWDRIVER, SNUG JACK INTO INSULATOR HOUSING.

PART NUMBER	CONFIGURATION	NOTES / REFERENCE
CT2215-9	WHITE	-
CT2215-6	BLUE	-
CT2215-5	GREEN	-
CT2215-4	YELLOW	-
CT2215-2	RED	-
CT2215-0	BLACK	-

PART NUMBER TABLE

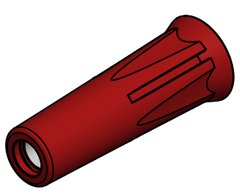

ISOMETRIC VIEW

THIRD ANGLE PROJECTION

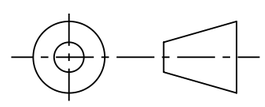

REFERENCE

UNLESS OTHERWISE SPECIFIED DIMENSIONS ARE IN MILLIMETERS
TOLERANCES ARE:
X.X = ±0.5 X.X° = ±0.5°
X.XX = ±0.25
X.XXX = ±0.125
DO NOT SCALE DRAWING

MATERIAL: SEE NOTES
TREATMENT: N/A
FINISH: SEE NOTES

PROJECT NO.

APPROVALS		DATE
DRAWN	GSG	8/24/2022
CHECKER	B. HANSEN	8/24/2022
ENGR.	B. HANSEN	8/24/2022
DESIGN ACTIVITY		

METRIC

Cal Test ELECTRONICS
22820 Savi Ranch Prky.
Yorba Linda, CA 92887
USA

TITLE: 4mm IN-LINE JACK, INSULATED DIY ASSEMBLY

SIZE: B | CAGE CODE: 43F45 | DWG. NO.: CT2215 | REV.

SCALE: 1:1 | SHEET: 1 OF 1