THIS IS ISSUED IN STRICT CONFIDENCE THAT IT IS NOT USED AS A BASIS FOR MANUFACTURE OR SALE AND THAT IT IS NOT COPIED, REPRINTED OR DISCLOSED TO A THIRD PARTY EITHER WHOLLY OR IN PART WITHOUT THE PRIOR WRITTEN CONSENT OF CAL TEST ELECTRONICS, INC.

REVISIONS

REV.	DESCRIPTION	DATE	APPROVED
A	INITIAL RELEASE	1/9/2025	B. Hansen

NOTES:
1. MATERIAL:
   1. BODY: BRASS, NICKEL PLATED
   2. HEX NUT: STEEL ZINC PLATED, OR BRASS NICKEL PLATED
   3. SOLDER TAB: BRASS, NICKEL PLATED
2. RATING:
   1. CURRENT: 36 A MAX.
   2. TEMPERATURE: -20°C TO +150°C
3. MAXIMUM PANEL THICKNESS: 11.0 mm [0.43 in]
4. RoHS 2 COMPLIANT
5. AVAILABLE WITHOUT SOLDER TAB, REFER TO MODEL NUMBER CT2224
6. SUPPLIED WITH:
   1. SOLDER TAB (1)
   2. HEX NUT (2), PART CT3156
7. WEIGHT:
   1. INDIVIDUAL: 2.9 g/pc

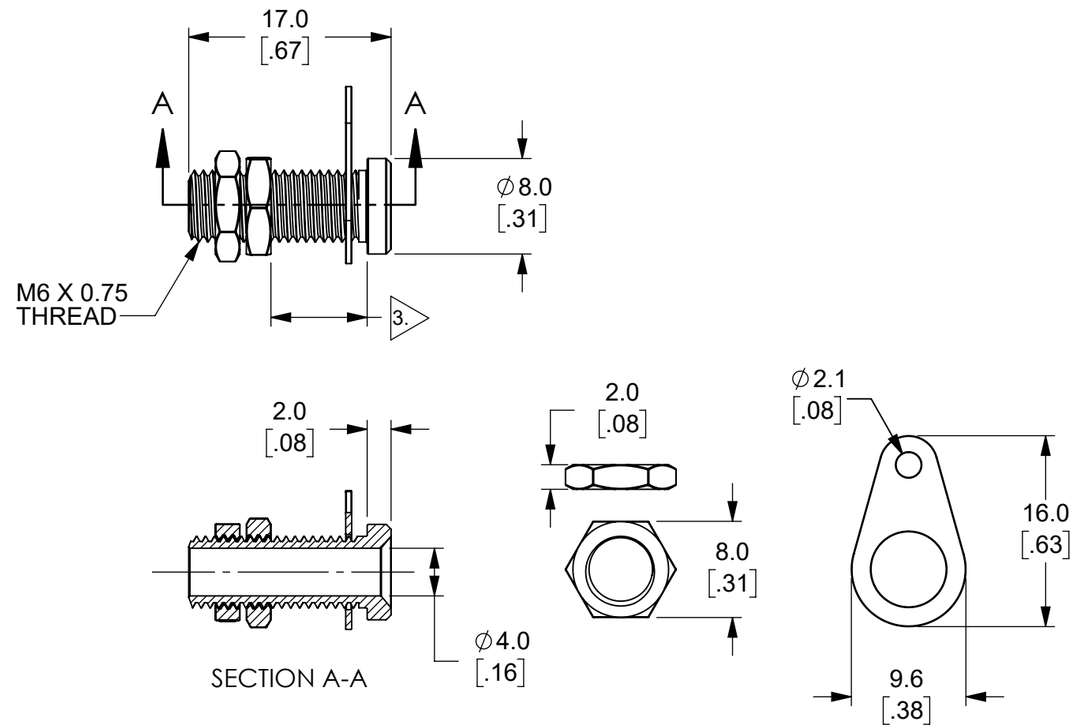

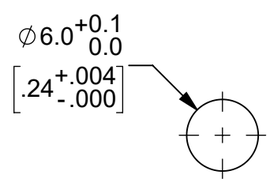

MOUNTING HOLE

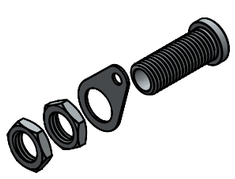

ISOMETRIC VIEW
FULL SCALE

MODEL NUMBER	CONFIGURATION	NOTES / REFERENCE
CT4544	NICKEL PLATED	-

MODEL NUMBER TABLE

THIRD ANGLE PROJECTION

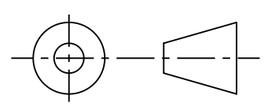

REFERENCE

UNLESS OTHERWISE SPECIFIED DIMENSIONS ARE IN MILLIMETERS
TOLERANCES ARE:
X.X = ±0.5 X.X° = ±0.5°
X.XX = ±0.25
X.XXX = ±0.125
DO NOT SCALE DRAWING

MATERIAL: SEE NOTES
TREATMENT: NONE
FINISH: SEE NOTES

PROJECT NO. A828

APPROVALS		DATE
DRAWN	GSG	11/27/2024
CHECKER	B. HANSEN	11/27/2024
ENGR.	B. HANSEN	11/26/2024
DESIGN ACTIVITY		

METRIC

Cal Test ELECTRONICS
22820 Savi Ranch Prky.
Yorba Linda, CA 92887
USA

TITLE: UNINSULATED PANEL MOUNT 4mm JACK w/SOLDER TAB, THROUGH HOLE

SIZE: B | CAGE CODE: 43F45 | DWG. NO.: CT4544 | REV.: A

SCALE: 2:1 | SHEET: 1 OF 1