THIS IS ISSUED IN STRICT CONFIDENCE THAT IT IS NOT USED AS A BASIS FOR MANUFACTURE OR SALE AND THAT IT IS NOT COPIED, REPRINTED OR DISCLOSED TO A THIRD PARTY EITHER WHOLLY OR IN PART WITHOUT THE PRIOR WRITTEN CONSENT OF CAL TEST ELECTRONICS, INC.

REVISIONS

REV.	DESCRIPTION	DATE	APPROVED
A	CLASS A RELEASED - UPDATED FORMAT w/ CAGE CODE.	5/20/2025	B. Hansen

NOTES:
1. ALL SPECIFICATIONS SUBJECT TO CHANGE WITHOUT NOTICE.
2. MATERIAL:
   - PLUG BODY: BRASS, NICKEL PLATED
   - CONTACT SPRING: BERYLLIUM COPPER, NICKEL PLATED
   - INSULATOR: POLYAMIDE (NYLON)
3. ELECTRICAL:
   - MAXIMUM VOLTAGE: 33 VAC, 70 VDC (IEC) / 1,200 V (NON-HANDHELD)
   - MAXIMUM CURRENT: 36 A
4. MECHANICAL:
   - TEMPERATURE: -20°C TO +80°C
5. MAXIMUM WIRE SIZE:
   - CONDUCTOR: ∅ 2.05 mm [0.08"]
   - INSULATION: ∅ 3.90 mm [0.15"]
   - STRIP LENGTH: 6.40 mm [0.25"]
6. RoHS 2 AND REACH COMPLIANT

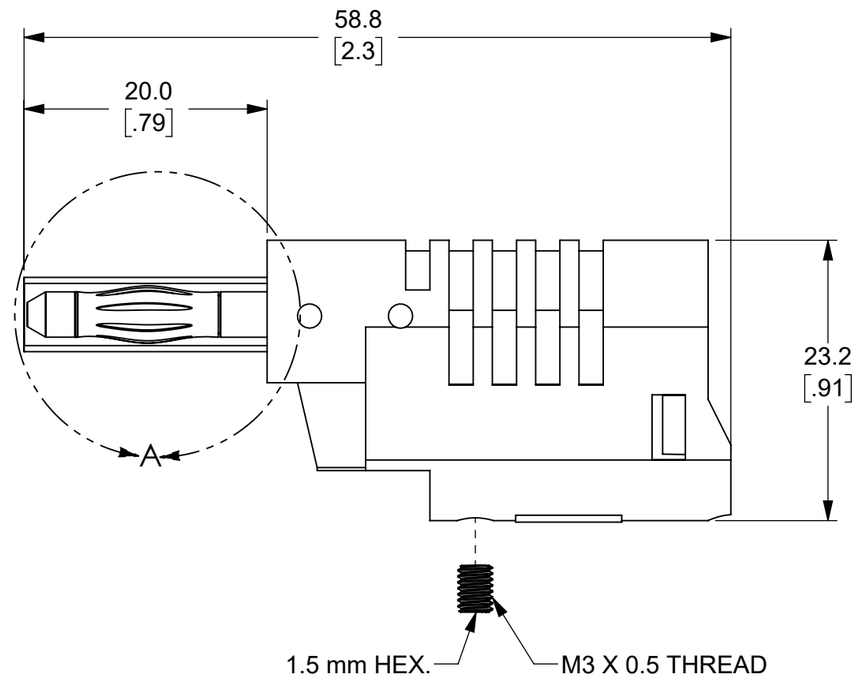

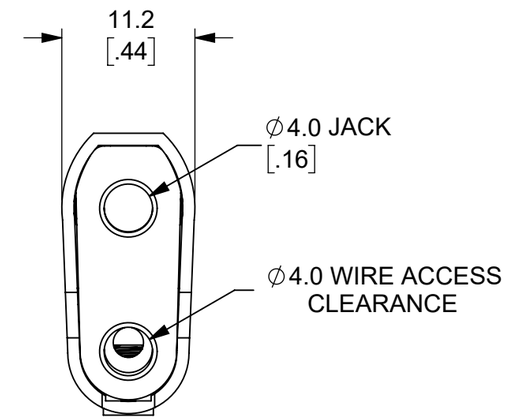

MODEL NUMBER

CT2015-#

COLOR:
- 0 - BLACK
- 2 - RED
- 4 - YELLOW
- 5 - GREEN
- 6 - BLUE
- 9 - WHITE

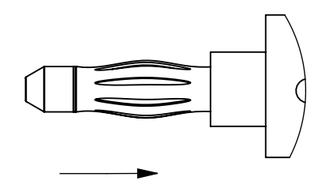

RETRACTABLE SLEEVE

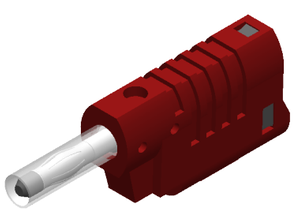

ISOMETRIC VIEW
FULL SCALE

THIRD ANGLE PROJECTION

REFERENCE

UNLESS OTHERWISE SPECIFIED DIMENSIONS ARE IN MILLIMETERS
TOLERANCES ARE:
X.X = ±0.5 X.X° = ±0.5°
X.XX = ±0.25
X.XXX = ±0.125
DO NOT SCALE DRAWING

MATERIAL: SEE NOTES

TREATMENT: NONE

FINISH: SEE NOTES

PROJECT NO.

APPROVALS		DATE
DRAWN	GSG	4/8/2024
CHECKER	B. HANSEN	4/8/2024
ENGR.	B. HANSEN	04/12/2022
DESIGN ACTIVITY		

METRIC

Cal Test ELECTRONICS
22820 Savi Ranch Prky.
Yorba Linda, CA 92887
USA

TITLE: DIY 4mm PLUG, STACKING RETRACTABLE w/ SET SCREW ATTACHMENT

SIZE	CAGE CODE	DWG. NO.	REV.
B	43F45	CT2015	A

SCALE 2:1 SHEET 1 OF 1